Self-Contained Emergency Lighting - MCU-R Series

Model : MCU209NC2-R

Product Overview

The Self-Contained Emergency Light Luminaires MCU209NC2-R uses two 12V 9W MR16 LED lamps for lighting.

The device is controlled by the microcontroller. Thus, it can be activated by either pressing the Function Test button on the device or by remote testing.

The chassis is made with 1 mm. thick Electro-Galvanized sheets coated with Epoxy powder and stove enameled to help protect from any possible rust.

Technical Specifications

Mode of Operation	Non-Maintained
Input Voltage	220 VAC / 50Hz ± 10%
Output Voltage	12VDC
LED Lamp Power	9W / Bulb
Color Temperature	Warm White (3000K ± 250K) Daylight (6000K ± 250K)
Rated Beam Angle	50Deg
Battery Type / Capacity	Sealed Lead-Acid Maintained Free 12V-2.9Ah
Protections	- AC, DC Fuse - Battery Low Voltage Cut-Off - Surge Protection
Testing Systems	- Automatic Testing - Manual Testing or Remote Testing
Charging Mode	Constant Voltage & Limit Current
Charging Current	290mA
Charging Time	10-15 Hrs
Backup Time	2.0 Hrs
Housing	Electro-galvanized steel sheet 1mm. thick with epoxy powder coating
Dimensions (LxWxH)	285 x 170 x 195 mm
Weight	3.45 Kg
IP Rating	20
Mounting	Recessed Ceiling

Features

- Having LED lifetime of over 50,000 hours
- Automatically recharged with constant voltage and limited current
- Battery overcharge protection circuit prevents overcharge which is the cause of battery swelling
- Battery discharge protection circuit prolongs the battery life
- Under voltage protection circuit allows the unit to automatically activate the emergency light in case any fault occurs in the main power distribution system or in case of power failure (140-160VAC)
- Allowing testing with a remote control
- Equipped with the Auto Test function:
  - Every 1 month on the 1st day of the month at 12.00-12.30 hrs
  - Every 6 months on the 1st day of the month at 12.00-13.00 hrs

Indicators

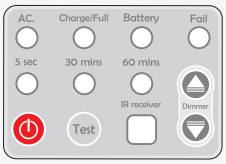

LED **AC.**	Indicating input status
LED **Charge/Full**	Indicating charging status
LED **Battery**	Indicating battery voltage range
LED **Fail**	Indicating error status
LED **5 sec**	Indicating that the 5 seconds test is enable
LED **30 mins**	Indicating that the 30 minutes test is enable
LED **60 mins**	Indicating that the 60 minutes test is enable
Switch **On/Off**	For turning on/off the light (not plugged in)
Switch **Test**	For testing the device's availability (during normal circumstance)
IR receiver	An infrared receiver
Dimmer	A brightness adjustment button (for HZ model only)

Dimensions (mm)

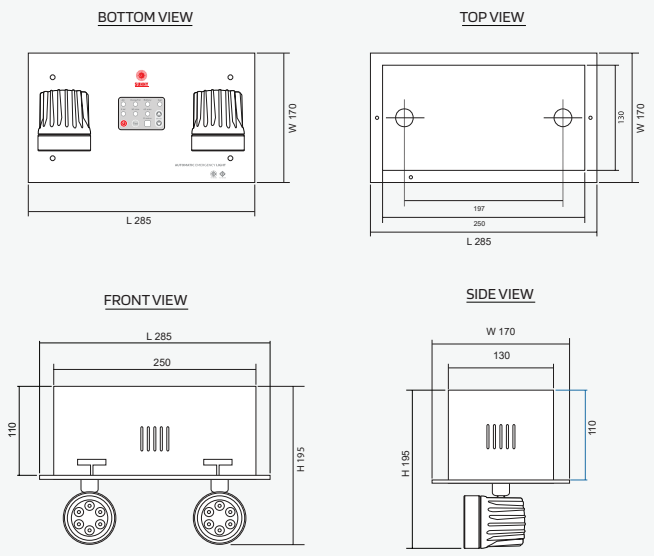

The company reserves the final right for explanation on any of the information presented hereby.