Accessories - LED Downlight | DLJ151 Series

Model : DLJ151 12-112

Product Overview

Downlight Lamp recessed ceiling type DLJ151 Series. The lamp can adjust the direction of the beam for 45 degrees. The lamp works with the installation of LED bulb LED MR16 GU5.3 by operating with emergency lighting control system.
Central battery Systems of 12VDC in case of power failure, will provide emergency lighting for escape.

Technical Specifications

Model	DLJ151 12-112
Input Voltage	12VDC
LED Lamp Power	12W
Lumen (lm) / Bulb	1,080
Lamp Type	LED MR16
Base	GU5.3
CCT	Warm White (3000K ± 250K) Daylight (6000K ± 250K)
CRI	>80
Lamp Life Time	50,000 Hrs
Beam Angle	50 Degree
IP Rating	20
Dimension LxWxH (mm)	127 x 127 x 80
Material	Diecasting aluminium
Weight (g)	240
Hole cut (mm)	110
Lamp Warranty	10 Year
Mounted	Recessed Ceiling

Dimensions (mm)

FRONT VIEW

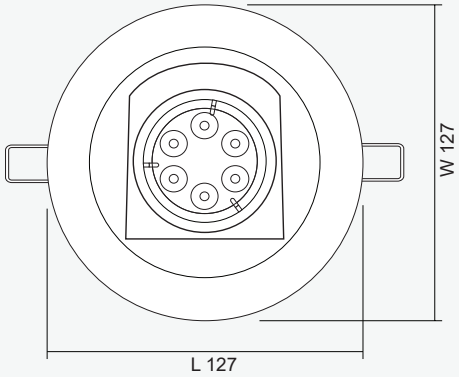

SIDE VIEW

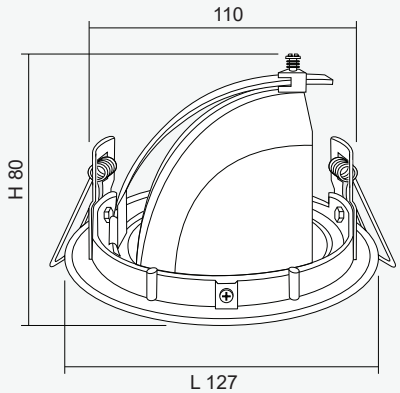

The company reserves the final right for explanation on any of the information presented hereby.